[Contribution from the Purdue Research Foundation and the
Department of Chemistry, Purdue University]

A NEW METHOD OF PREPARING SUBSTITUTED VINYL COMPOUNDS. DEPOLYMERIZATION STUDIES ON VINYL POLYMERS.[1, 2]

G. BRYANT BACHMAN, H. HELLMAN, K. R. ROBINSON, R. W. FINHOLT,
E. J. KAHLER,[3] L. J. FILAR, L. V. HEISEY, L. L. LEWIS,
D. D. MICUCCI

Received July 28, 1946

The depolymerization or "cracking" of polyvinyl compounds to simple monomers has long been known and has proved useful in the determination of structures of polymers and in the recovery of scrap in the plastics industry. However, systematic study of the process has not been exhaustive either as regards its theory, practice, or implications in chemical synthesis. The present investigation was undertaken with the object of developing a new method for synthesizing substituted vinyl compounds by altering polymers chemically and then depolymerizing them.

The chemical alteration of vinyl polymers has been frequently studied and applied industrially, but in general the products have been used as such rather than as sources of monomers. The new method makes available certain substitution products which cannot be made directly from monomeric vinyl compounds because of the great reactivity of the double bonds present in them. Essentially it involves protection of such bonds from chemical attack by converting them to saturated polymers followed by regeneration of the double bonds through depolymerization.

One type of application of the method may be illustrated by the following equations:

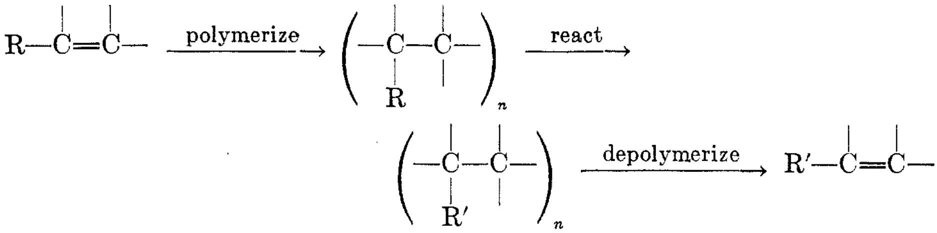

$$R\text{—}\overset{|}{C}\text{=}\overset{|}{C}\text{—} \xrightarrow{\text{polymerize}} \left(\text{—}\underset{R}{\underset{|}{\overset{|}{C}}}\text{—}\underset{|}{\overset{|}{C}}\text{—}\right)_n \xrightarrow{\text{react}} \left(\text{—}\underset{R'}{\underset{|}{\overset{|}{C}}}\text{—}\underset{|}{\overset{|}{C}}\text{—}\right)_n \xrightarrow{\text{depolymerize}} R'\text{—}\overset{|}{C}\text{=}\overset{|}{C}\text{—}$$

This paper describes the application of the method to the preparation of halogenated styrenes and related aromatic vinyl compounds. Such substances have attained considerable interest recently in the synthetic rubber and plastics industries.

Depolymerization of high polymers. The application of energy in the form of

---

[1] Read before the Organic Section at the Chicago Meeting of the American Chemical Society, September 1946.

[2] From the M.S. and Ph.D. theses of the authors (except G. B. B.), Purdue University.

[3] Present address, Monsanto Chemical Company, Springfield, Mass.

heat, light, audible, and ultrasonic vibrations, mechanical deformation, and chemical reagents causes high polymers to be degraded, but heat alone is the only practical means for accomplishing complete depolymerization. Polymers vary considerably in the temperature at which depolymerization sets in and in the yields of the desired monomer obtainable from them. In general, structures containing quaternary carbon atoms (or hetero atoms) in the polymer chain are more readily and more perfectly depolymerized than other structures. Thus polymethacrylates (or polyoxymethylenes) depolymerize to the corresponding monomers much more satisfactorily than polyacrylates. Nevertheless chains containing tertiary and secondary carbon atoms may be cracked in varying yields to the corresponding vinyl monomers. The polymerization-depolymerization reaction must be considered as essentially an equilibrium reaction. Since energy is evolved in polymerization, it is evident that depolymerization will be favored by supplying energy to the polymer. The energy of activation for the polymerization of styrene is about 30 Cal. while the value for the depolymerization of polystyrene has recently been given as 21.9–23 Cal. (1). Equilibrium reactions which differ in activation energies by 7–8 Cal. may be considered reversible. It should be noted, however, that depolymerization probably proceeds by the breaking of bonds at random postions in the polymer chain while polymerization probably involves the addition of monomer units to the ends of the growing polymer chains. In this sense depolymerization is not strictly the reverse of polymerization. Kinetic treatments of depolymerization reactions have been based on statistical analyses, usually under the assumption that all bonds connecting monomeric units have the same probability of being broken (2). All such treatments ignore secondary reactions arising from the breaking of other bonds than those connecting monomer units and free radical reactions leading to the formation of complex products. It is evident, however, from the poor yields of monomers obtainable from many polymers that such secondary reactions are often important or even predominant in the cracking process.

An attempt was first made to determine the conditions which influence the yield of monomers obtainable on depolymerization and to arrive at a procedure which gives high yields. The following factors were found to be important: (a) the chemical structure of the polymer, (b) its method of formation, (c) its molecular weight, (d) the rate and temperature of cracking, (e) the effect of catalysts, (f) the recracking of partially cracked material, and (g) the use of inhibitors to prevent repolymerization of the monomer.

The effect of chemical structure on the yield of polymer may be seen in Table I. These data were all collected under similar depolymerization conditions. It is interesting to note that the copolymer of styrene with methyl methacrylate gave only fair yields of styrene although polymethyl methacrylate alone depolymerizes in very much better yields than does styrene itself. The styrene-maleic anhydride copolymer gave even poorer yields of styrene.

The method of formation of a polymer seems to be important. Thus there is every reason to suppose that poly-α-methylstyrene would depolymerize in better yields than polystyrene because of the quaternary carbon atoms in the chain. However, α-methylstyrene cannot be polymerized under the usual conditions employed for styrene. Instead of peroxides, strong acids are used as catalysts (3). The polymer contains substantial amounts of a saturated dimer (4) and may differ materially from polystyrene in its structure. Unfortunately we have not yet had an opportunity to examine the higher polymers of α-methylstyrene reported recently by Hersberger, Reid, and Heiligmann (5). Polystyrenes prepared in carbon tetrachloride gave low yields of monomer. Quantities of hydrogen chloride were evolved in these depolymerizations indicating that the solvent had entered the polymer (6).

The influence of molecular weight on cracking yields is closely associated with, and possibly inextricably entangled with, the influence exerted by the method of formation of the polymer. This is so because low molecular weight polymers are obtained by the use of conditions (solvent, temperature, type of catalyst, etc.) which probably alter the structural nature of the polymer.[4] From our studies it would appear that the higher polymers (M.W. $> 20{,}000$) give better yields of monomer than the lower polymers (M.W. $< 20{,}000$). We are not prepared to say whether the molecular weight alone is responsible for this difference. In Table II are shown monomer yields from polymers of varying molecular weights. All other factors have been arbitrarily excluded.

TABLE I

EFFECT OF CHEMICAL STRUCTURE ON MONOMER YIELDS

POLYMER	MONOMER YIELD, %
Methyl methacrylate	90–95
α-Methylstyrene[a]	18–19
Dichlorostyrene[b]	60–70
m-Trifluoromethylstyrene[c]	65
Styrene	60–65
Styrene-maleic anhydride[d]	11–12
Styrene-methyl methacrylate[d]	66

[a] This is a low M.W. polymer obtained by treatment of α-methylstyrene with conc'd. H_2SO_4 at 0°.

[b] Obtained by bulk polymerization of monomeric dichlorostyrene supplied by Mathieson Alkali Works, Inc., Niagara Falls, New York.

[c] Preparation to be described in a forthcoming publication.

[d] Copolymers; the yields are calculated on the basis of styrene obtained to styrene present in the polymer.

Rapid, high-temperature heating of polymers seems to give better yields of monomers than slow heating at lower temperatures. Under the latter conditions products of complex structure become stable and are formed along with the monomeric styrene. They are not readily depolymerized to styrene. This was clearly shown by an experiment in which polystyrene was heated in an autoclave at 400° for 12 hours. On opening the bomb no styrene was found to be present and none could be obtained from the brittle, glassy product under the usual depolymerization conditions. This indicates that monomer formation is accompanied or followed by other reactions leading to products of intermediate molecular weight which behave on heating quite differently from the original polymer. It is these competitive reactions which are a primary factor in limiting the yields of monomer obtainable from a given polymer, and which make it important to depolymerize and remove the monomer from the high temperature zone as rapidly as possible.

---

[4] See Bartovics and Mark, (7) for the effect of temperature of polymerization on the viscosity behavior of polystyrene.

Various methods have been proposed for achieving the preferred conditions of depolymerization. Thus an inert diluent such as sand is added to improve the heat transfer and avoid caking (8), or a molten metal or fused salt bath is used (9), or the polymer is cracked with superheated steam (10). In our hands none of these has proved especially advantageous on quantities of a kilogram or less of polymer. Many cracking procedures lead to compounds which boil near styrene but differ from it structurally. Careful fractionation is necessary in such cases to determine the actual yield of the desired monomer.

TABLE II

EFFECT OF MOLECULAR WEIGHT ON MONOMER YIELDS OF POLYSTYRENES

POLYMER	VISCOSITY M.W.[a]	MONOMER YIELD, %
A-24	3680	52
A-22	4670	48
A-20	5700	49
A-1	7000	31
Styron	37,000	62
A-13	60,000	55
Lustron	74,000	62
A-18	169,500	62
A-2	190,000	63
A-28	very high[b]	67

[a] The Staudinger equation was used. A $k = 1.8 \times 10^{-4}$ was employed.

[b] This was a bulk polymer formed by allowing styrene to stand at room temperature without catalysts for several months. Its M.W. was not determined but was undoubtedly over 200,000.

All catalysts and diluents added to the polymer in the hope of increasing the yields of monomer either were without any effect (alumina, sand, sodium hydroxide, iron filings, steel wool, ceresin wax, Silicone fluid), or materially decreased the yield (aluminum chloride). Catalysts of the sort used in cracking petroleum would be expected to accelerate other types of cleavage than simple depolymerization. Greensfelder and Voge (11) have recently called attention to some of the differences between thermal and catalytic cracking of paraffins which illustrate this point.

A cracking system designed to return the partially cracked products to the cracking pot gives no better yields than otherwise, but the monomers are more readily purified by redistillation. An oxygen-free atmosphere in the cracking equipment and the addition of inhibitors to the receiving flask materially reduce the tendency of the cracking distillate to repolymerize. We were unable to detect an appreciable advantage in cracking polystyrenes under reduced pressure, although higher-boiling monomers such as the chlorinated styrenes were obtained more smoothly and in better yields under such conditions.

The most satisfactory method found for laboratory scale depolymerizations was to heat the polymer in a flask as rapidly as possible with two Meker burners. The flask was attached to a heated packed column (Fig. 1) which served to return the partially cracked vapors to the pot. Above the column was a condensing system adapted to handle large volumes of distillate without flooding. In this equipment 1 kg. of styrene could be cracked in 90 minutes with yields of 60–65%. The yields were determined on carefully fractionated material.

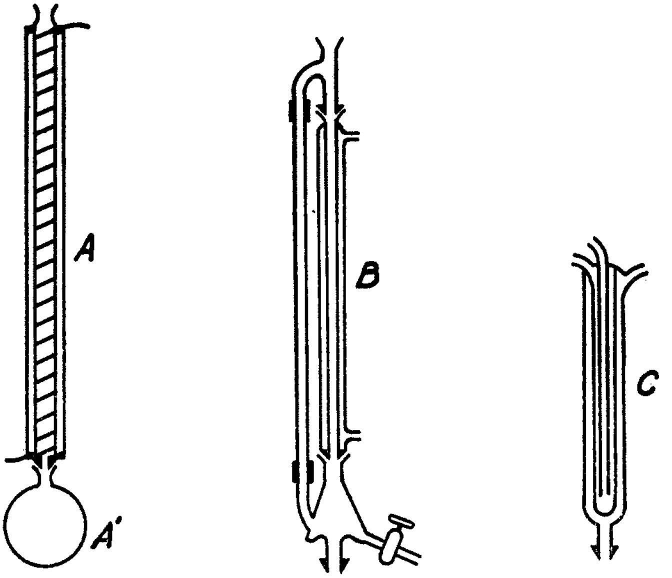

FIG. 1. COLUMN CRACKING UNIT
In operation C fits into the top of B and B into the top of A.

Chemical reactions of aromatic polymers. Polystyrene has been sulfonated (12), nitrated (13), and chlorinated (14). We have reexamined each of these reactions and have in addition studied the bromination and the alkylation of polystyrene under Friedel-Crafts conditions. Only the halogenation products can be depolymerized satisfactorily. Sulfonated polystyrene chars on heating while nitrated polystyrene explodes. The alkylation product cracks to give a complex mixture of products which contains little or none of the desired substituted styrene. Apparently aluminum chloride, even in amounts of 1–2%, causes extensive rearrangements of polystyrene. We have also chlorinated poly-α-methylstyrene and polyindene. Neither of these products gives as good results on depolymerization as do the corresponding styrenes.

Chlorination of polystyrene. The general procedure employed was as follows: polystyrene, dissolved in a suitable solvent, was chlorinated under conditions favoring nuclear substitution; after precipitation and removal of solvent the chlorinated polymer was cracked by heating, and the product was collected and purified by distillation.

A commercial polystyrene of low molecular weight (Dow *Styron* YA5K27) and one of high molecular weight (Monsanto *Lustron* Molding Powder) gave about the same yields of styrene on cracking, but the polymer of low molecular weight was preferable because it required less solvent during chlorination. The solution of the high molecular weight polymer was so viscous that it was difficult to pass chlorine into it.

Suitable solvents for the chlorination of styrene polymers seem to be restricted to chlorinated hydrocarbons. Other solvents either do not dissolve polystyrene and chlorinated polystyrene, or are themselves attacked by chlorinating agents. Carbon tetrachloride, which can be used for very low molecular weight polymers is unsuitable for polystyrenes of molecular weights of 50,000 or higher, which includes nearly all commercial polystyrenes. Tetrachloroethane or chloroform can be used for polymers of high molecular weight. The product prepared using tetrachloroethane solvent gave slightly better yields of mixed monomers than did the product chlorinated in chloroform; however, chloroform was much easier to remove from the polymer. Chlorinations of aqueous emulsions of polystyrene were unsuccessful, for the polymer precipitated before sufficient chlorination could take place. Emulsion polymers were prepared using a wide variety of cation and anion active emulsifying agents, but in every case the polymer precipitated very soon after chlorination was started.

Despite the use of low temperatures, darkness, and halogen carriers, some side-chain chlorination always resulted, for hydrogen chloride was evolved on cracking. It may be that nuclear positions in polystyrene are sterically hindered to a considerable degree, thus favoring side-chain chlorination.

Since many substances are formed in the cracking of chlorinated polystyrene, it was necessary to use good rectification in order to separate and identify the products. Relatively inefficient laboratory columns (6 theoretical plates) did not give entirely satisfactory separations. However, if a very efficient column (100 theoretical plates) was used, the distillation proceeded so slowly that most of the dichlorostyrene polymerized in the still pot. This was true even though the rectification was done under vacuum in an inert atmosphere (nitrogen), and in the presence of polymerization inhibitors. Less trouble was experienced in this respect with monochlorostyrenes than with dichlorostyrenes. Both the mono- and the di-chlorostyrenes polymerize more rapidly than styrene itself.

The fractionated monomers were shown by chlorine analyses, refractive indices, and permanganate oxidations to the corresponding chlorinated benzoic acids, to be principally *p*-chlorostyrene and 3,4-dichlorostyrene. From runs with about twice as many moles of chlorine as styrene, the mixture of monomers contained about 10% of *p*-chlorostyrene, 20–25% of dichlorostyrenes (principally the 3,4-isomer), and 15–20% of unidentified but volatile chlorinated products. All of the monomers, separately or mixed, polymerized readily in the presence of peroxide catalysts to give clear polymers of high molecular weight. In the regular GR-S rubber formulas, excellent elastomers were obtained, but the polymerization rates were lower than those with dichlorostyrenes prepared by other methods. Apparently the present process introduces inhibitors which are not readily removed by simple distillation.

Bromination of polystyrene. The procedure was similar to that used in the chlorination. It was possible to obtain *p*-bromostyrene in 23% yields by the monobromination of polystyrene in carbon tetrachloride followed by cracking of the product. However, even when a considerable excess of bromine was used, it was not possible to obtain a dibromostyrene in this manner. All brominations were run at room temperature, in the dark, and in the presence of iron catalyst. After the bromine had been added, the mixtures were allowed to stand several days to favor completion of the reaction. A bromination with liquid bromine and no other solvent was unsuccessful. Even finely powdered polymer agglomerated to an undissolved mass which the bromine did not penetrate.

Chlorination of poly-α-methylstyrene and polyindene. Since the unsubstituted polymers of α-methylstyrene and indene depolymerize in poor yields (both around 15–20%), it was not anticipated that the halogen substituted polymers would give good yields of monomers. Actually dichlorinated poly-α-methylstyrene gave about 6% yields of 3,4-dichloro-α-methylstyrene while dichlorinated polyindene gave 15% yields of a product whose structure was not determined but which boiled in the range to be expected for the isomeric dichloroindenes.

Conclusions. It is believed that the preparation of substituted vinyl compounds by chemically altering and then depolymerizing the corresponding vinyl polymer offers certain advantages and is a broadly applicable synthetic method. Obviously there are other types of chemical alterations and other types of polymers to which the general method may be applied besides those employed in this investigation. It is our hope to examine some of these possibilities in the near future.

Acknowledgment. The authors wish to express their thanks to the General Tire and Rubber Company and the Purdue Research Foundation for funds and to the former for cooperation in the evaluation of the synthetic rubbers described. They are also indebted to the Mathieson Alkali Works, the Barrett Division, and the Dow Chemical Company for special chemicals.

EXPERIMENTAL

Throughout this part, the letter A refers to polymers, and B to reactions with polymers.

Polystyrenes. In addition to Dow Styron YA5K27 (M.W. 50,000) and Monsanto Lustron Molding Powder (M.W. 74,000) a number of other styrene polymers were studied. The methods of preparation and cracking characteristics of some of them are shown in Table III.

Chlorination of polystyrenes. The chlorination equipment used in the beginning of the work consisted merely of a 76 x 5-cm. tube fitted with a condenser leading to a gas trap, an inlet tube with a fritted glass disk, and a thermometer well. The progress of the chlorination was followed by weighing the chlorination tube at various intervals. The capacity of the tube was small, however, and for larger scale preparations it was necessary to use a three-necked flask or a 120 x 10-cm. tube cooled by an ice-bath contained in a 15-cm. steel pipe closed at the bottom by a welded steel plate 25 cm. square. Eventually six of these latter units were operated simultaneously. The amount of chlorine to be introduced was measured volumetrically in liquid form into a test tube and allowed to evaporate through a fritted glass inlet. A more satisfactory and convenient method was to use a small chlorine bomb which could be weighed from time to time during the chlorination, and the weight of chlorine determined by difference.

After halogenation it was necessary to remove the solvent and dry the chlorinated polymer to constant weight. A convenient method of precipitation consisted in adding the polymer solution to well-stirred alcohol. If the precipitation was done slowly, using solutions containing less than 10–15% of polymer, the product obtained was usually light colored

TABLE III

PREPARATION AND CRACKING CHARACTERISTICS OF POLYSTYRENES

RUN NO.	MONOMER, ML.	SOLVENT, ML.	CATALYST, G.	EMULSIFYING AGENT, G.	TEMP, °C.	TIME, HRS.	VISCOSITY M.W.[a]	CRACKING YIELD, %[b]
A-0	Styrene 780	Dioxane 1500	Bz_2O_2 3.5		100	48	20,000	
A-1	Styrene 4000	CCl_4 3800	Bz_2O_2 12.2		85	22	7,000	31
A-2	Styrene 700	Water[f] 6000	H_2O_2 12.6	Soap 30	60	25	190,000	63
A-3	Styrene 700	Water[f] 6000	H_2O_2 12.6	Stearonyx 15	60	40		65
A-10	Styrene 345 M.M.A.[c] 310	Water[f] 6000	H_2O_2 12.6	Stearonyx 15	60	44		47
A-13	Styrene 750	Water[f] 6000	H_2O_2 36.6	Tergitol 4[i] 158	80	10.5	60,000	55
A-17	Styrene 700	Water[f] 6000	H_2O_2[g] 19.5	Soap 30	50	36		54
A-18	Styrene 520	None	Bz_2O_2		60	96	169,500	62
A-20	Styrene 520	CCl_4 1040	Bz_2O_2 15.6		60	150	5770	49
A-22	Styrene 520	CCl_4 1040	Bz_2O_2 46.8		60	150	4670	48
A-24	Styrene 520	CCl_4 1040	Bz_2O_2 78.0		60	150	3680	52

TABLE III—*Concluded*

RUN NO.	MONOMER, ML.	SOLVENT, ML.	CATALYST, G.	EMULSIFYING AGENT, G.	TEMP., °C.	TIME, HRS.	VISCOSITY M.W.[a]	CRACKING YIELD, %[b]
A-26	Styrene 312 M.A.[d] 294	Benzene 1380	Bz_2O_2 12.1		80	24		12[h]
A-30	Styrene[e] 50	Water 150 Glycerol 150	Bz_2O_2 0.5		90	5		56
AL	Lustron						74,000	62
AS	Styron YA5K27						50,000[i]	62

[a] Staudinger equation used.

[b] Average values.

[c] M.M.A. is methyl methacrylate.

[d] M.A. is maleic anhydride.

[e] A pearl polymer.

[f] The emulsion polymers were coagulated with salt and acid before cracking.

[g] Lauryl mercaptan 12.6 g. was added to determine whether it might exert a desirable modifying action.

[h] Yield of styrene. The maleic anhydride was largely decomposed and carbon dioxide was evolved in large quantities.

[i] Data on M.W. provided by company supplying product.

[j] A 22% aqueous solution.

and free from mechanically entrained impurities. However, the method was not practicable on a large scale because it was time consuming and required a large ratio of alcohol to solvent. It was found that steam distilling the solution of the polymer or adding the solution slowly to boiling water gave a satisfactory separation of polymer and solvent. The polymer was collected by filtration, washed with alcohol, and dried at 110°. This was the procedure used for precipitating the product of large scale chlorinations which were run in chloroform or carbon tetrachloride. When the higher-boiling tetrachloroethane was the solvent, precipitation from hot water failed, for the polymer usually agglomerated, remained sticky, and retained solvent. Alcohol precipitation was used for these polymers. If the alcohol wash was omitted for the polymers precipitated in hot water, the product was very difficult to dry.

The more significant experiments are summarized in Table IV.

The distillates (containing inhibitor) from a number of cracking operations were fractionated in a 75-cm. glass helices packed column at 2.5–5 mm. pressure several times. The products obtained were as follows: (a) *p*-Chlorostyrene, yield 10%. The purest sample showed the properties: b.p.$_{2.5}$ 45.8–45.9°, n_D^{20} 1.5648, d_{25}^{25} 1.090.[5]

Anal. Calc'd for C_8H_7Cl: Cl, 25.6. Found: Cl, 26.3.

---

[5] Ushakov and Matuzov (15a) report b.p.$_2$ 48.5–49°, n_D^{20} 1.5702, d_4^{20} 1.1143. Brooks (15b) reports b.p.$_3$ 53–54°, d_4^{20} 1.090, n_D^{20} 1.5658. Both preparations were from *p*-chlorobenzaldehyde *via* *p*-chlorophenylmethyl carbinol.

Oxidation with permanganate yielded *p*-chlorobenzoic acid, m.p. 238–240° (Beilstein, m.p. 242–243°).

(b) 3,4-Dichlorostyrene, yield 25%. The purest sample showed the properties: b.p.$_5$ 81.6–83.5°, n_D^{28} 1.5769.[6]

Anal. Calc'd for $C_8H_6Cl_2$: Cl, 40.9. Found: Cl, 40.2.

Oxidation with permanganate yielded 3,4-dichlorobenzoic acid, m.p. 205.0–205.5.° (Beilstein, m.p. 203–204°).

(c) Intermediate and higher-boiling fractions not further identified, yield 15%.

Synthetic rubbers were prepared from: (a) a mixture of the chlorinated styrenes containing all of the steam volatile fraction from several depolymerization runs, (b) a distillation fraction containing principally monochlorostyrenes, and (c) a distillation fraction containing principally dichlorostyrenes. These rubbers were reported by the General Tire and Rubber Company to compare favorably with rubbers prepared from Mathieson dichlorostyrene. However, the cracked distillates copolymerized more slowly than the commercial product. In seeking to determine where a polymerization inhibitor was being formed in the process a number of experiments were run. It was finally concluded that the inhibitor or its progenitor was formed in the chlorination step.

TABLE IV

CHLORINATION OF POLYSTYRENE AND CRACKING RESULTS

RUN[a] NO.	SOLVENT, L.	CHLORINE, G.	CATALYST, G.	TIME, HRS.	PRODUCT, G.	CHLORINE, %[b]		CRACKING[c] YIELD, %
						A	B	
A1-B4	CCl_4, 2.5	950	$SbCl_5$, 11.7	17	1113	43.4	43.5	36
A1-B5	CCl_4, 2.5	874	I_2, 6	15	1150	45.7		34
A1-B6	CCl_4, 2.5	925	$FeCl_3$, 24	13	1087	42.6	42.2	31
AS-B12	$(CHCl_2)_2$, 2.5	1025	$FeCl_3$, 6	14	1120	44		46
AS-B18	$(CHCl_2)_2$, 4.2	630	$SbCl_5$, 11.7	10	700	40		45
AS-B19	$(CHCl_2)_2$, 2.5	908	I_2, 3	19.5				42
AS-B22	$CHCl_3$, 2.6	1026	$FeCl_3$, 4	18	1004	38		38
AS-B23	$CHCl_3$, 2.7	951	I_2, 3	22.5	984	37		40
AS-B24	$CHCl_3$, 2.7	990	$FeCl_3$, 4 I_2, 1	24.5	976	36		41
Mathieson Dichlorostyrene								75
Monsanto Dichlorostyrene (Styramic HT)								66

[a] In all experiments 624 g. of polystyrene were used except in AS-B18 in which 416 g. were used.

[b] The chlorine content of the polymer was calculated on, (A) the increase in weight of the polymer, and (B) a chlorine determination by analytical methods. Since the two values correspond closely, the analytical determinations were dropped in later experiments.

[c] The cracking yield was determined by distilling the cracked distillate and weighing the fraction boiling 55–120° at 10 mm. pressure.

Bromination of polystryene. Bromine (160 g., 1.0 mole) was added dropwise over a period of four hours to a solution of Dow Styron YA5K27 (104 g., 1.0 mole) in carbon tetrachloride (500 ml.) in which was suspended iron catalyst (2 g.). The mixture was contained in a three-necked flask equipped with a mercury sealed stirrer, condenser, and dropping-funnel. The reaction was run at room temperature, and the mixture was shielded from light. After standing for three days, the product was precipitated in alcohol and dried to constant weight at about 100°. The dried polymer, which was light brown in color, weighed 156 g. A 100-g. sample of this material was cracked at 20 mm. pressure by heating the powder in a flask with a free flame and passing the vapors through a three-foot glass tube, packed with porous plate, heated to 400° in a Carius furnace. The crude slightly reddish cracking distillate weighed 82.5 g. Redistillation gave a crude bromostyrene, b.p.$_{17}$ 85–100°, yield 50%. The liquid was washed with 10% HCl, stirred with Norit and twice distilled. The final pure product was a colorless liquid which readily decolorized bromine and permanganate; yield 25–35%, b.p.$_{13}$ 87°, d_{25}^{25} 1.3891, n_D^{25} 1.5850; dibromide m.p. 60.5–61.0°.[7]

---

[6] Michalek and Clark (16a) report b.p.$_3$ 76°, d_4^{25} 1.243, n_D^{25} 1.5840. Brooks (15b) reports b.p.$_4$ 69–70°, d_4^{20} 1.256, n_D^{20} 1.5857. Marvel (16b) reports b.p.$_5$ 95°, n_D^{20} 1.5851.

Anal. Calc'd for C_8H_7Br: Br, 46.4. Found: Br, 46.4.

The bromostyrene obtained by this process was further identified by oxidizing a sample with alkaline permanganate to *p*-bromobenzoic acid, m.p. 251–253° (Beilstein 251–253°).

Chlorination of poly-α-methylstyrene. α-Methylstyrene was polymerized by adding dropwise 535 ml. of redistilled monomer (b.p. 162–164°) to 600 ml. of conc'd H_2SO_4 at a temperture of −15° to −10°, while using vigorous stirring. The mixture was allowed to stand for three hours at −10° to +10°. The acid layer was decanted, and the sticky orange solid was washed with ice-water and steam distilled, giving about 16 g. of oil and leaving a white sticky polymer as a residue. The oil solidified on standing for 2 days, and was recrystallized from alcohol giving white crystals (m.p. 51–52°) which did not decolorize $KMnO_4$ in acetone nor Br_2 in CCl_4. Evidently this is the saturated dimer reported by Tiffeneau (4).

The polymer was chlorinated in CCl_4 solution in the dark at 0–5°, using about 340 g. of polymer, 1500 ml. of CCl_4, and 1 g. of $FeCl_3$. In 20½ hours, 442 g. (6.2 moles) of chlorine was added. The molar ratio of chlorine to monomer was about 2.1 to 1. The mixture was steam distilled to remove the solvent, washed with alcohol, and dried in the oven overnight at 80°. The heat of the oven caused the polymer to darken somewhat. It remained sticky and was difficult to dry; yield 450 g. Cracking of this product gave only 6% yields of a mixture of chloro compounds from which was isolated the chief component, 3,4-dichloro-α-methylstyrene, b.p.$_9$ 97–100°, n_D^{25} 1.5746, d_{25}^{25} 1.2675. This compound was also prepared from ethyl 3,4-dichlorobenzoic acid by a method which will be described in a future publication. This sample showed the following constants: b.p.$_3$ 94°, n_D^{25} 1.5732; d_{25}^{25} 1.2242.

Anal. Calc'd for $C_9H_8Cl_2$: Cl, 37.9. Found Cl, 37.9.

Oxidation with permanganate gave 3,4-dichlorobenzoic acid, m.p. 205–206° (Beilstein, 203–204°).

3,4-Dichloro-α-methylstyrene is readily copolymerized with butadiene to give excellent rubbers. Like α-methylstyrene it is stable to peroxides when free of other polymerizable substances. This is an advantage in the purification and storing of the monomer.

Chlorination of polyindene. Barrett's Cumar Resin W1, a solid polymer consisting mainly of polyindene with a small amount of polycoumarone, was used in these experiments. The resin (235 g., *ca.* 2 moles of monomer) was dissolved in 1200 ml. of CCl_4 and chlorinated in the dark at 0–10° in the presence of 1 g. of $FeCl_3$. In 6½ hours, 390 g. of chlorine was added. This is an excess of 104 g. over 4 moles. After standing for 36 hours, the mixture was steam distilled, removing the solvent and leaving a fluffy powder which was filtered, washed with alcohol, and dried at 90°. The weight of dried product was 417 g., indicating that 182 g. (5.1 g. atoms) of chlorine had been absorbed. This is slightly over 2.5 atoms of chlorine per indene unit.

The chlorinated Cumar (200 g.) was cracked in the usual manner, giving 53.4 g. of condensate and 95 g. of residue. The condensate was redistilled at 3–5 mm. in a Claisen flask giving three fractions, (a) 75–90°, 15.7 g.; (b) 90–140°, 14.9 g.; (c) 140–260°, 10.4 g. They were not further investigated.

---

[7] Ziegler and Tiemann (17a) report for *p*-bromostyrene b.p.$_{11}$ 83.5–84.5°, d_4^{20} 1.401, n_D^{20} 1.5961, dibromide m.p. 60–61°. Brown and Nelles (17b) for the same compound report b.p.$_{13}$ 88°, d_4^{20} 1.400, n_D^{20} 1.5933, dibromide m.p. 64°.

Nitration of polystyrene.[8] Polystyrene (5 g.) (M.W. 50,000) was added gradually, with strring, to 60 ml. of fuming HNO_3 (sp. g. 1.49 to 1.50). The finely powdered solid dissolved almost immediately with the evolution of heat. After the temperature began to drop, the mixture was heated for one hour at 50°. The cooled mixture was poured into about 1½ liters of cold water, giving a pale yellow solid, which was filtered, washed with water, and dried; yield 6.5 g. Nitropolystyrene thus prepared is soluble in nitrobenzene, fuming nitric acid, and conc'd sulfuric acid, but in no other common laboratory solvents. It averages about 9.5–10.0% nitrogen (calc'd for mononitrostyrene 9.4%; for dinitrostyrene, 14.4%). It decomposes without depolymerizing on heating. With fuming nitric acid at reflux temperatures or in a sealed Carius tube at 150° products containing up to 11.22% nitrogen were formed. A dinitropolystyrene could not be obtained even in the presence of conc'd sulfuric acid.

Nitropolystyrenes can be completely reduced to aminopolystyrenes only with considerable difficulty because of the solubility characteristics of the nitro compounds. It is best to use polymers of low M.W. (20,000–50,000) and to reduce an aqueous ammoniacal suspension of the finely divided polymer with sodium hydrosulfite ($Na_2S_2O_4$). In this manner a product completely soluble in dilute acids is obtained.

Finely divided nitropolystyrene, 5 g., was suspended in a solution containing 200 ml. water, 25 ml. conc'd ammonium hydroxide and an excess of sodium hydrosulfite. The mixture was heated three days on a steam-cone, acidified, and the precipitated sulfur removed. The solution was made basic and the polyaminostyrene was filtered off and dried; yield 2.5 g. of a tan colored powder. Aminopolystyrene was not prepared in sufficient amounts to study its depolymerization.

Aminopolystyrenes may be diazotized without difficulty. The diazonium salts couple with phenols and aromatic amines to give yellow and red dyes which are very insoluble in all solvents. Cloth may be dyed by the ingrain method. The colors formed are not greatly different if mordants (tannic acid or tartar emetic) are used and are very fast to washing and solvent action. Diazotized aminopolystyrene was coupled with the following compounds both in solution and absorbed on cotton cloth: β-naphthol—red; Neville and Winther acid—brown-red; Schaeffer's acid—red; α-naphthol—brown; Broenner's acid—brown; dimethylaniline—red in acid, brown in neutral and basic solutions.

Sulfonation of polystyrene. Dow Styron YA5K27 was dissolved in a large excess (10 volumes) of conc'd sulfuric acid by stirring and heating at 100°. The temperature was slowly raised to 160° and heating continued for about eight hours or until a sample of the mixture gave no precipitate when poured into water. The product was cooled, poured into ice and water, neutralized with sodium hydroxide, and evaporated to dryness. The mixture of sodium sulfate and sodium polystyrene sulfonate was ground with potassium cyanide and then heated in the hope that a cyanostyrene would be formed through replacement of the sulfonate group and depolymerization of the product. Only charring resulted and no substituted styrene was obtained.

Alkylation and acylation of polystyrene. Numerous attempts were made to alkylate polystyrene in solution with methyl, ethyl, and propyl halides and to acylate it with acetyl and benzoyl chlorides in the presence of Friedel-Craft type catalysts. Apparently reaction occurred for hydrogen halide was evolved copiously. All attempts to depolymerize the products to the expected substituted styrenes led to complex mixtures. Eventually it was discovered that polystyrene is rapidly degraded and rearranged by aluminum chloride and that cracking in the presence of as little as 1–2% of this catalyst yields very little styrene and gives products boiling over a wide range, which show no unsaturation to bromine or permanganate.

The acylation of styrene itself was recently patented (18). The products were not distilled or carefully purified. Our attempts to prepare acetyl- or benzoyl-styrenes by these and similar procedures yielded polymers on attempted distillation. These were cracked and distillates obtained which did not boil in the right range but which did repolymerize rapidly. Similar results were obtained with α-methylstyrene. It is our belief from numerous experiments that pure alkylated or acylated styrenes cannot be prepared by these methods without considerable modification.

---

[8] The preliminary experiments were done in this laboratory by G. M. Steinberg, Latimer Evans, and S. J. Miller. Their contributions are gratefully acknowledged.

Depolymerization experiments. Space does not permit a detailed description of the hundreds of depolymerizations run in the course of this investigation. Instead, general descriptions of the apparatus, techniques, and results not already discussed will be given.

A molten lead depolymerization bath, Fig. 2, similar to the one described by Philip, Stanley, and Wood (9) was constructed. Best results were obtained when the molten metal was held at temperatures of 450–500° and there was vigorous stirring. It was found: (a) that dry, bulk polymer gave better yields than the same polymer in a 10% aqueous emulsion or in a 30% benzene solution, although the liquid forms offered less mechanical difficulties during addition; (b) the yield of cracked distillate (average 80–90%) was considerably higher than the yield of pure styrene (average 60–65%) as determined by fractional distillation through a column; (c) the recracking of products boiling above styrene (so-called dimers, trimers, and tetramers) gave considerable amounts of more volatile materials but very little (2–5%) more styrene; (d) for amounts up to at least 1 kg. other depolymerization equipment is preferable from the standpoint of convenience of operation.

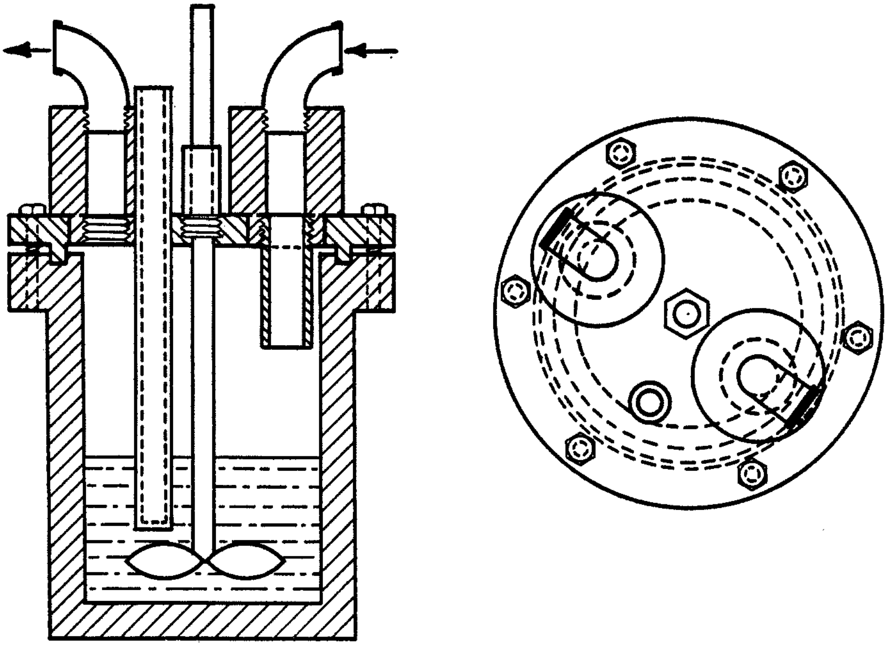

FIG. 2. LEAD BATH CRACKING UNIT

The equipment illustrated in Fig. 1 was simple to operate and gave consistently high yields of monomers which were practically free of high-boiling products. The take-off was adjusted to a 1:1 ratio at the start of a depolymerization when nearly pure monomer was evolved. Later a 3:1 ratio was used to return high-boiling products to the pot. The parallel condenser system avoided flooding and made possible a very rapid cracking rate. The polymer was cracked as rapidly as possible.

The pot A′ was variable in size. Column A was 35 x 460 mm. and was filled with 6–7 mm. glass helices and wound with 20 ft. of No. 24 Nichrome wire which served as a heating unit. Other dimensions are proportional to the illustration and are not especially critical.

SUMMARY

A new method has been developed for synthesizing substituted vinyl compounds which consists in altering polymers chemically and then depolymerizing them. The method has been applied especially satisfactorily to the preparation of halogenated styrenes.

An extensive study of the depolymerization of polyvinyl compounds has been made and factors influencing yields of monomers have been determined.

LAFAYETTE, IND.

REFERENCES

(1) VOTINOV, KOBEKO, AND MAREI, *J. Phys. Chem.*, (U. S. S. R.), **16**, 106 (1942); *Chem. Abstr.*, **37**, 5304 (1943).

(2) MONTROLL AND SIMHA, *J. Chem. Phys.*, **8**, 721 (1940); *Chem. Abstr.*, **34**, 7161 (1940). MONTROLL, *J. Am. Chem. Soc.*, **63**, 1215 (1941). SIMHA, *J. Applied Phys.*, **12**, 569 (1941). SCHULZ, *Z. physik. Chem.*, **51**, 127 (1942).

(3) *cf.* STAUDINGER AND BREUSCH, *Ber.*, **62**, 442 (1929); BERGMANN, TANBADEL, AND WEISS, *Ber.*, **64**, 1493 (1931).

(4) TIFFENEAU, *Ann. chim.*, (8) **10**, 158 (1907).

(5) HERSBERGER, REID, AND HEILIGMANN, *Ind. Eng. Chem.*, **37**, 1073 (1945).

(6) *cf.* BREITENBACH *et al.*, *Oesterr. Chem.-Ztg.*, **41**, 182 (1938); *Z. physik. Chem.*, **187**, 175 (1940).

(7) BARTOVICS AND MARK, *J. Am. Chem. Soc.*, **65**, 1901 (1943).

(8) German Patent 642,289.

(9) U. S. Patent 2,248,512.

(10) U. S. Patent 2,359,212.

(11) GREENSFELDER AND VOGE, *Ind. Eng. Chem.*, **37**, 519 (1945).

(12) British Patent 367,416; German Patent 580,366.

(13) (a) Blyth and Hofmann, *Ann.* **53**, 316 (1845). (b) U. S. Patent 2,274,551.

(14) U. S. Patent 1,890,772. German Patent 573,065.

(15) (a) USHAKOV AND MATUZOV, *J. Gen. Chem.* (U. S. S. R.), **14**, 120 (1944). (b) BROOKS, *J. Am. Chem. Soc.*, **66**, 1295 (1944).

(16) (a) MICHALEK AND CLARK, *Chem. Eng. News*, **22**, 1559 (1944). (b) MARVEL *et al*, *J. Am. Chem. Soc.*, **68**, 864 (1946).

(17) (a) ZIEGLER AND TIEMANN, *Ber.*, **55**, 3406 (1922). (b) BROWN AND NELLES, *Ber.*, **66**, 1464 (1933).

(18) U. S. Patent 2,197,709.